TYPE PROJECT

CATALOG#

LHALD625 - 6" ARCHITECTURAL WALL WASH LED (2000LM/3000LM)

6" LED HOUSING AND TRIM

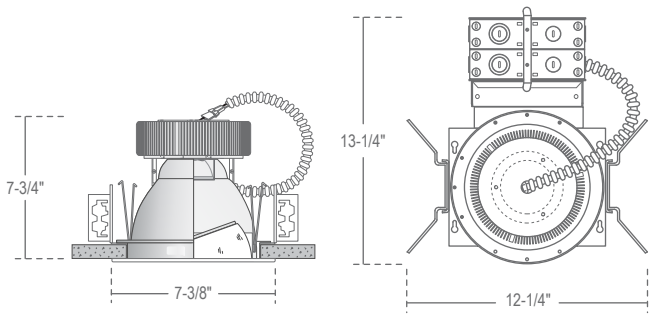

Ceiling Cut-out: 6-3/8"
Max. Ceiling Thickness: 1-1/4"

SPECIFICATION

120V/277V LED
25W/2000LM 28W/3000LM

Application: This architectural-grade LED housing and wall wash trim combination is designed for medium to high ceilings in commercial and architectural spaces. High lumen output wall Wash trim provides excellent lighting of walls and objects without drawing attention to the lamp source.

Housing Frame: 16 gauge galvanized plaster ring with powder coat finish, six friction clips secure trim to housing for ceilings up to 1 3/4" thick. Triple slot bat-wing hanger brackets accommodate multiple bar hanger systems.

Mounting: Housing suitable for new construction installations only, Bat-Wing bar hanger brackets adjust vertically 3 1/4" for multiple ceiling types and accepts 1/2" EMT. 26" C Channel Strut for T-bar ceilings and 27" adjustable linear hanger bars for plaster ceilings or wood/metal joists. Heavy duty 16-gauge, die-formed galvanized steel. Bar hangers optional. Steel V-Spring allow for easy installation of Heat-Sinked Reflector trim.

Driver Type (All 120V/277V): Available in Non-Dimming, 0-10V 10% Dimming, Hilume 1% Dimming, UniDim™ Universal Dimming, 0-10V 1% Dimming, DALI Dimming, Lutron Ecosystem, and Emergency (9W).

Emergency Option: 10 Watt Remote Emergency Battery Back-up available, mounted adjacent to housing by installer. Remote test switch and plate cover included.

Junction Box: 16 gauge pre-wired galvanized steel double Junction Box, 64 cubic-inch for a maximum of (8) #12 AWG wires. Furnished with (10) 3/4", (2) 1" and (8) Romex knockouts. Strain clamps to install or remove covers for easy access and ground wire. Equipped with safety standard die-cast aluminum fitting for flex-conduit.

Insulation Contact: Non IC rated housing must be kept 3" from insulation.

Warranty: Covered by a 5 year warranty to be free of defects in materials and craftsmanship. Fixture should not be installed in applications with ambient temperature above 40° degrees Celsius. Doing so will result in reduced lamp life and voided warranty.

Dimming: 0-10V dimming option (-D10) works with most 5-Wire 0-10V dimmers. Available with 1% Deep Dimming Option. Factory qualified for use with Leviton IP710-DLX and Lutron NTFTV-WH. The Lutron Hi-Lume (-DHL) and Ecosystem (-DEC) option designed for use with LUTRON Ecosystem Controls. Uni-DimTM (-DUN) option is a universal dimming system that works with most 3-Wire ELV, 2-Wire Incandescent and 5-Wire 0-10V fluorescent dimmers.

Reflector Construction: One piece self-flanged design provides a clean trim finish, without the need for a secondary trim ring. Heavy-gauge aluminum reflector prevents ugly dents during shipping and installation. Held in place with 6 steel pressure springs housing frame.

Power Connection: LED lamp array is replaceable via on board quick disconnect terminal. Meets CA Title 24 requirements and other standards restricting the use of Medium Base or Bi-Pin sockets.

Lumen Maintenance: Minimum 50,000 hours L70 life based on ANSI TM-21 calculations from LM80 standardized test results.

Thermal Management: Effective thermal dissipation facilitated by integral cast-aluminum, finned heat sink design for maximum heat rejection to provide long LED life.

Color Temperature: Comes standard with 3000K Warm White LEDs binned to within 3-Step MacAdam Ellipses (SDCM) and surpasses the ANSI C78 377A standard for color deviation. Available in other color temperatures, 2700K, 3500K and 4000K, binned according to the ANSI standard.To order, use "-T" suffix followed by color temperature. Example: -T40 = 4000K. Consult factory as extended lead times may apply.

Thermal Temperature: Heat dissipation facilitated by exposed integral aluminum heat sink to maximize heat rejection in an open air environment. Recommended ambient temperature is below 35° degree Celsius to achieve minimum L70 life of 50,000 hours according to LM80 standard.

Safety Labels: ETL/cETL listed. Suitable for dry, damp and wet locations. NYC approved: Calendar #41937.

Caution: LITON recommends use of surge protectors on the power entering LED Housings. Surge damage is not covered by warranty.

FEATURES:

Damp Location | Emergency Back-Up | US Assembled | Wet Location | Dedicated LED | Wall Wash | Intertek | 120V | 277V

ARCHITECTURAL HOUSING

	Dimming		Options		Accessories	
LHALD625	**C070UE**	:None	**Blank**	:None	**/C260**:	26" C Channel
	C070UE-D10	:0-10V 10% Dimming	**-EM2**	:Emergency (10W)	**/C260-J**:	26" Adj. C-Channel
	C070UE-DHL	:Hilume 1% Dimming	**-EM3**	:Emergency (20W)		
	C070UE-DUN	:UniDim™ Universal Dimming	**-GTD**	:Generator Transfer Device		
	C070UE-D10P1	:0-10V 1% Dimming				
	C070UE-DLI	:DALI Dimming				
	C070UE-DEC	:Lutron Ecosystem				

TRIM - LRALD671

Finish		Lumen Package	
SWF	:Satin Reflector / White Flange	**101**	:1400 Lm 19W LED
WWF	:White Reflector / White Flange	**150**	:2000 Lm 25W LED
		240	:3000 Lm 28W LED

▸ Ordering Example: LHALD625C070UE-D10 / LRALD671SWF101

MISCONTINUED

2022.10.22